Work Order ID 69199

Wednesday, May 04, 2011 12:29:38 PM

Item ID: D4368-043
Revision ID: PRELIM
Item Name: Aft Wearplate Assembly

Accept

Setup Start
Stop

Start Date: 5/4/2011 **Start Qty:** 1.00
Required Date: 5/6/2011 **Req'd Qty:** 1.00

Cust Item ID:
Customer:

Reference:

Run Start
Stop

Approvals: **Process Plan:** AA **Date:** 11.05.04 **Tooling:** _____ **Date:** _____
QC: _____ **Date:** _____ **SPC (Y/N):** _____ **Date:** _____

Sequence ID/ Work Center ID	Operation Description	Set Up/ Run Hours	Tool ID	Tool #	Plan Code	Accept Qty	Reject Qty	Reject Number	Insp. Stamp
Draw Nbr / **Revision Nbr**									
D4368 / PA2									
100		0.00							
Waterjet	**Memo**	0.00				B11-5-4			
FLOW CNC Waterjet	1-Cut as per Dwg (D4368-3) Dwg Rev:_____ Prog Rev:_____ 2-Deburr if necessary								
110	QC2- Inspect parts off machine FAI/FAIB	0.00							
QC	**Memo**	0.00				B11-5-4			
Quality Control									

1

POSITIVE RECALL

PRELIMINARY ISSUE

Work Order ID 69199

Wednesday, May 04, 2011 12:29:38 PM

Item ID: D4368-043
Revision ID: PRELIM
Item Name: Aft Wearplate Assembly

Accept

Setup **Start**
Stop

Start Date: 5/4/2011 **Start Qty:** 1.00
Required Date: 5/6/2011 **Req'd Qty:** 1.00
Reference:

Cust Item ID:
Customer:

Run **Start**
Stop

Approvals: **Process Plan:** _____ **Date:** _____ **Tooling:** _____ **Date:** _____
QC: _____ **Date:** _____ **SPC (Y/N):** _____ **Date:** _____

Sequence ID/ Work Center ID	Operation Description	Set Up/ Run Hours	Tool ID	Tool #	Plan Code	Accept Qty	Reject Qty	Reject Number	Insp. Stamp
120 QC Quality Control	QC8- Inspect parts - second check **Memo**	0.00 0.00	→ Inspected only to Pa2 Dwg 8/11/05						
130 Brake NC Brake NC	Form as per dwg **Memo** *** Jigs DT8261 and DT8326.***	0.00 0.00	SD 11/05/05			1			
140 QC Quality Control	QC5- Inspect part completeness to step on W/O **Memo**	0.00 0.00	S 11/04/09						

Work Order ID 69199

Wednesday, May 04, 2011 12:29:38 PM

Item ID: D4368-043
Revision ID: PRELIM
Item Name: Aft Wearplate Assembly

Accept

Setup Start
Stop

Start Date: 5/4/2011 **Start Qty:** 1.00
Required Date: 5/6/2011 **Req'd Qty:** 1.00
Reference:

Cust Item ID:
Customer:

Run Start
Stop

Approvals: **Process Plan:** _____ **Date:** _____ **Tooling:** _____ **Date:** _____
QC: _____ **Date:** _____ **SPC (Y/N):** _____ **Date:** _____

Sequence ID/ Work Center ID	Operation Description	Set Up/ Run Hours	Tool ID	Tool #	Plan Code	Accept Qty	Reject Qty	Reject Number	Insp. Stamp
150		0.00				X1	11-06-08		JBL
Large Fab	**Memo**	0.00							
Large Fab	1- on D4369-3, fill cut outs with hardcoat welding rod as per dwg D4368 **DT9756** 2059 B Hardcoat Welding Rod BATCH#: M117659 2-weld D4369-3 to wearplate by positioning holes together as per dwg D4368 304 S.S. Welding Rod BATCH #: M107051 3-Transfer drill holes in bar								
160	QC9- Inspect visual per QSI004- Fusion Welds	0.00					11-06-09		
QC	**Memo**	0.00							
Quality Control									

Work Order ID 69199

Wednesday, May 04, 2011 12:29:38 PM

Item ID: D4368-043
Revision ID: PRELIM
Item Name: Aft Wearplate Assembly

Accept

Setup Start
Stop

Start Date: 5/4/2011 **Start Qty:** 1.00
Required Date: 5/6/2011 **Req'd Qty:** 1.00
Reference:

Cust Item ID:
Customer:

Run Start
Stop

Approvals: **Process Plan:** _____ **Date:** _____ **Tooling:** _____ **Date:** _____
QC: _____ **Date:** _____ **SPC (Y/N):** _____ **Date:** _____

Sequence ID/ Work Center ID	Operation Description	Set Up/ Run Hours	Tool ID	Tool #	Plan Code	Accept Qty	Reject Qty	Reject Number	Insp. Stamp
170	QC5- Inspect part completeness to step on W/O	0.00 - inspectors to PAZ							
QC	Memo	0.00 Dry only Subcontor @							
Quality Control									
180		0.00							
Small Fab	Memo	0.00				M1	11	06	09 (1)
Small Fab	1- After finish, coat entire top (concave) surface as per note 10 on sheet 2 dwg D4368. Black Rockerguard Plus 1 M116210								
190	QC5- Inspect part completeness to step on W/O	0.00							
QC	Memo	0.00							
Quality Control									

Picklist Print

Wednesday, May 04, 2011 12:29:35 PM

Work Order ID: 69199

Parent Item: D4368-043

Parent Item Name: Aft Wearplate Assembly

Start Date: 5/4/2011 **Required Date:** 5/6/2011

Start Qty: 1.00 **Required Qty:** 1.00

Comments: IPP Rev:A 11.04.12 new issue DD verf:EC

Component Item ID/ Item Name	Replacement Item ID	Mfg/ Purch	Bin Item	Primary Location	Last Location	Route Seq ID	Unit of Measure	Qty on Hand	Qty per Kit	Total Qty	Qty Issued	Date Issued	Status
D4369-3		Manufactured	No			150	Each	1.0000	1	1	11-8-8 a/BL		
Bar													
				Location		**Loc Qty**		**Loc Code**					
				FG		1							
					68406	1				X 1			
M304S18GA		Purchased	No			100	sf	129.0000	2.179	2.293684			
304/316 .050 Sheet										B 11-5-4			
				Location		**Loc Qty**		**Loc Code**					
				MAT020		129							
					112178	4							
					113062	18							
					116135	26							
					116604	12				116604			
					116979	69							

DART AEROSPACE LTD	Work Order:	69199
Description: AFT WEAR PLATE ASSEMBLY	Part Number:	D4368-042
Inspection Dwg: D4368-3 , Rev: PA2		Page 1 of 1

FIRST ARTICLE INSPECTION CHECKLIST

[X] First Article [X] Prototype

Drawing Dimension	Tolerance	Actual Dimension	Accept	Reject	Method of Inspection	Comments
.400	+/- .010	.401	✓		V IB02	
.050	+/- .010	.050	✓		V	
.875	+/- .010	.875	✓		V	
.125	+/- .010	.127	✓		V	
Ø .188	+.005 -.001	.190	✓		V	
3.00	+/- .030	3.009	✓		V	
5.377	+/- .010	5.377	✓		V	
4.00	+/- .030	4.001	✓		V	
.80	+/- .030	.800	✓		V	
1.75	+/- .030	1.754	✓		V	
2.25	+/- .030	2.253	✓		V	
3.00	+/- .030	3.00	✓		V	
9.885	+/- .010	9.885	✓		T IB02	
27.695	+/- .010	27.695	✓		T	
← 49.016	+/- .010	49.016	✓		T	
← 51.88	+/- .030	51.88	✓		T	
.050	+/- .010	.050	✓		V	

Measured by:	IB	Audited by:	S	Prototype Approval:	
Date:	11-5-4	Date:	11/05/05	Date:	

to PA2 only

Rev	Date	Change	Revised by	Approved
A		New Issue	KJ/JLM	

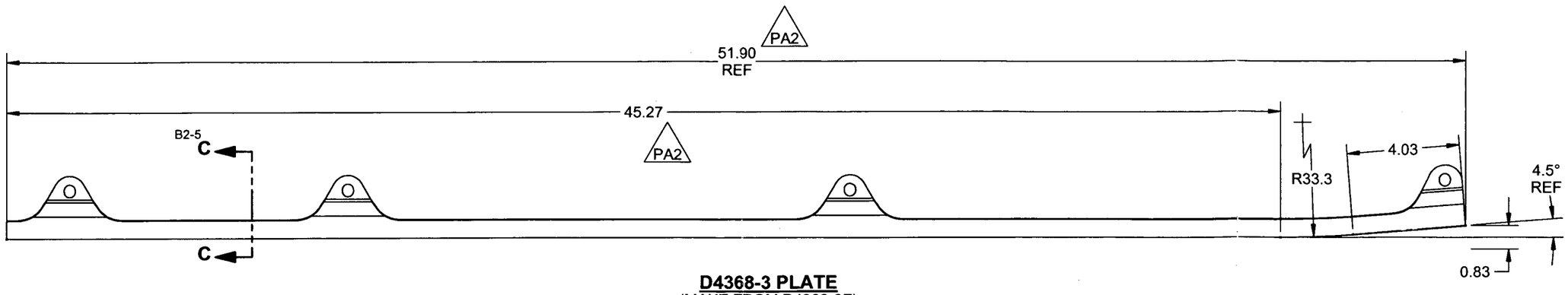

D4368-3 PLATE
(MAKE FROM D4368-3F)

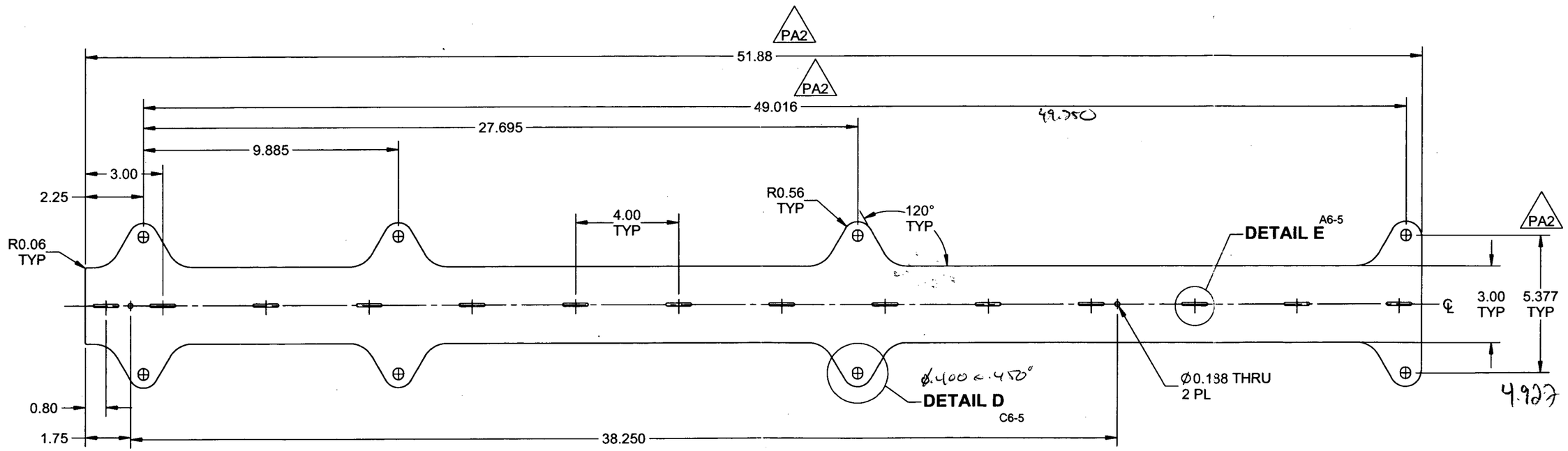

D4368-3F PLATE

PRELIMINARY ISSUE

NOTES:
1) MATERIAL: AISI 304/316 STAINLESS STEEL SHEET PER AMS 5513 OR 5524
OR ASTM A240 OR ASME SA240
18 GAUGE (0.050 THICK), REF. DART SPEC. M304S18GA
2) FINISH: NONE
3) TOLERANCES: PER DART QSI 018 UNLESS OTHERWISE NOTED
4) UNITS: INCHES UNLESS OTHERWISE NOTED
5) BREAK SHARP EDGES: 0.005 TO 0.010 MAX
6) IDENTIFICATION: N/A
7) WEIGHT: 2.50 lbs

DESIGN	SC	**DART AEROSPACE USA, INC.** PORT HADLOCK, WA
DRAWN	SC	
CHECKED		DRAWING NO. D4368 — REV. PA2 — SHEET 4 OF 5
MFG. APPR.		
APPROVED		TITLE: WEARPLATE ASSY — SCALE: NTS
DE APPR.		
DATE	11.03.24	

COPYRIGHT © 2011 BY DART AEROSPACE USA INC.
THIS DOCUMENT IS PRIVATE AND CONFIDENTIAL AND IS SUPPLIED ON THE EXPRESS CONDITION THAT IT IS NOT TO BE USED FOR ANY PURPOSE OR COPIED OR COMMUNICATED TO ANY OTHER PERSON WITHOUT WRITTEN PERMISSION FROM DART AEROSPACE USA INC.

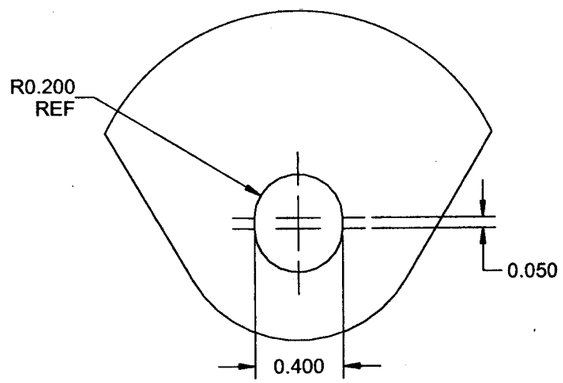

DETAIL D
SLOT DETAIL TYP
B3-3
B3-4

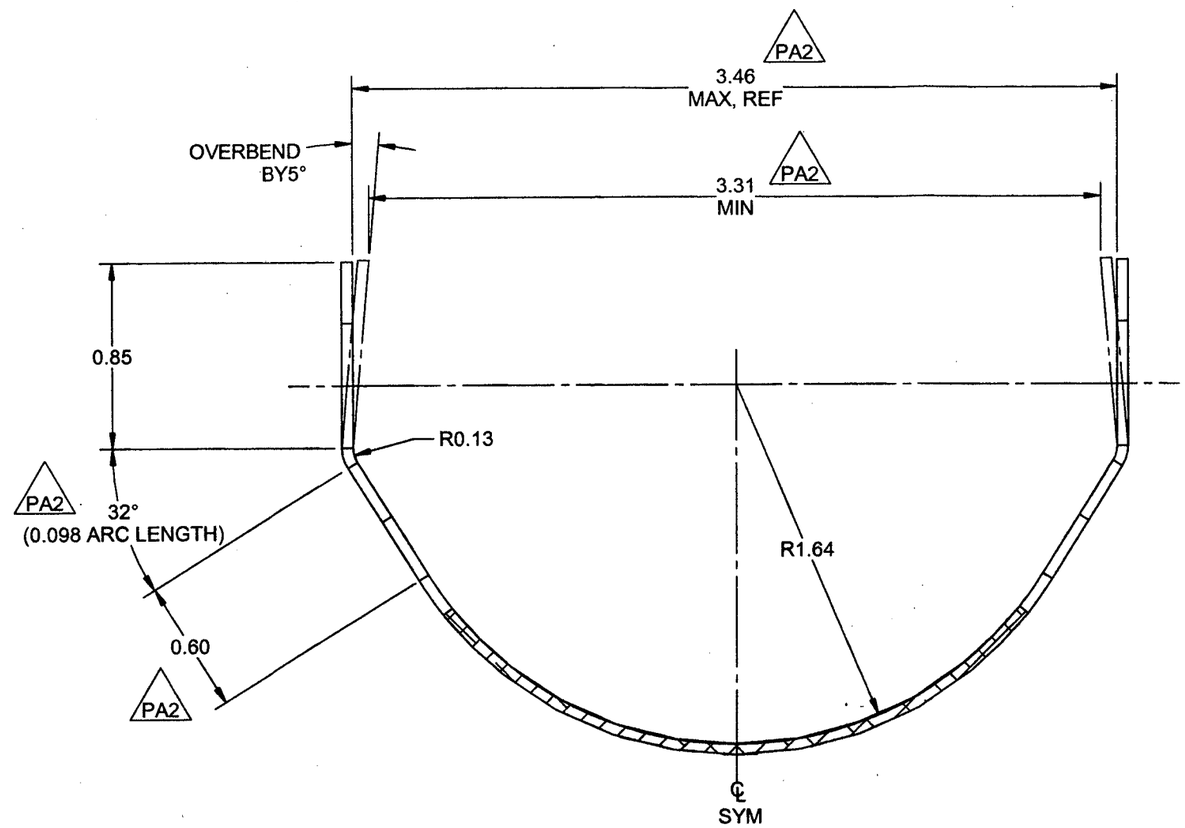

SECTION C-C
D3-3
D7-4

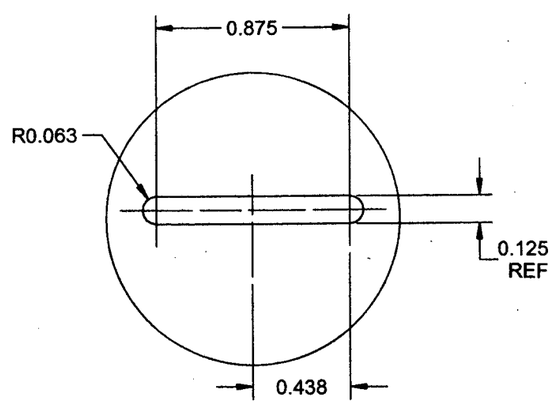

DETAIL E
SLOT DETAIL TYP
B5-3
B1-4

PRELIMINARY ISSUE

DESIGN	SC	**DART AEROSPACE USA, INC.** PORT HADLOCK, WA
DRAWN	SC	
CHECKED		DRAWING NO. D4368 — REV. PA2 — SHEET 5 OF 5
MFG. APPR.		
APPROVED		TITLE WEARPLATE ASSY — SCALE NTS
DE APPR.		
DATE 11.03.24		

COPYRIGHT © 2011 BY DART AEROSPACE USA INC.
THIS DOCUMENT IS PRIVATE AND CONFIDENTIAL AND IS SUPPLIED ON THE EXPRESS CONDITION THAT IT IS NOT TO BE USED FOR ANY PURPOSE OR COPIED OR COMMUNICATED TO ANY OTHER PERSON WITHOUT WRITTEN PERMISSION FROM DART AEROSPACE USA INC.